B-Cryo Series



- MOPD: 900 PSI (62 Bar)
- C_V Range: 0.045 to 0.440 (K_V Range: 0.038 to 0.374)
- 9 Watts

The B-Cryo Series is a 2-way miniature Cryogenic valve designed and built for service down to -320°F (-196°C) in applications needing a C_V between 0.045 and 0.440 (K_V between 0.038 and 0.374). Depending on your temperature requirements, the B-Cryo Series can be configured for liquid nitrogen (LN2), liquid carbon dioxide (LCO2), and other extreme temperature media. PTFE coated plungers, 316 Stainless Steel guide tubes and plunger springs, encapsulated coils, and Rulon® seat seals produce a truly robust Cryogenic valve for applications requiring high cycle life and media temperature control.

Typical Applications

- Environmental Chambers
- Food Processing
- Laser Surgical Equipment
- Semiconductor Manufacturing

Dimensions

In-Line Porting

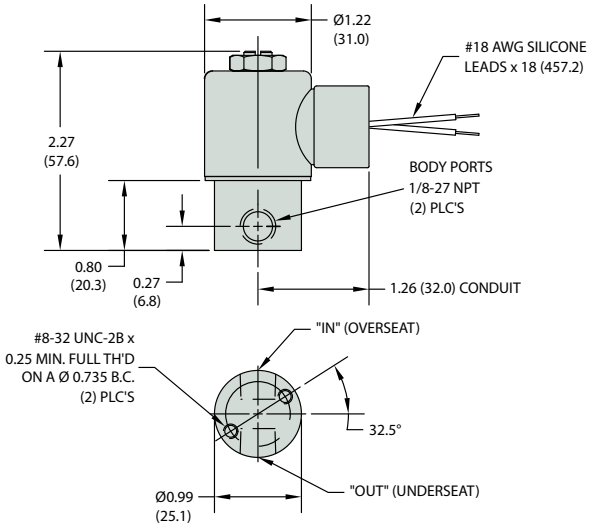

Bottom Outlet Porting

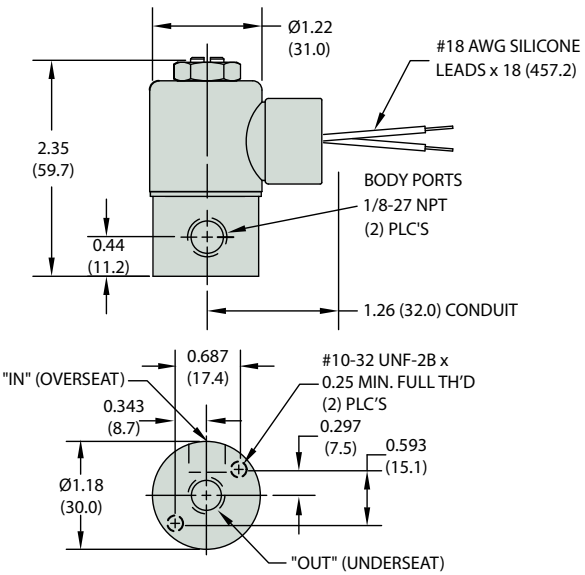

How To Order

Use the **Bold** characters from the choices listed on the following page to construct a product code.

B	C	20	05	–	01	LC	–	R	–	G6	–	203
Series	1 Porting	2 Function	3 MOPD	–	4 Body Material	5 Body Port	–	6 Seal Material	–	7 Coil Construction	–	8 Supply Voltage

Product Description from Example Shown Above:

BC2005-01LC-R-G6-203

BC2005 = B **Series** with Bottom Out Port, 2-Way Normally Closed Valve **Function**; 405 **MOPD**
-01LC = 303 Stainless Steel **Body Material**; 1/8" NPT Female **Body Port**
-R = Rulon® **Seal Material** (Plunger Seal and Internal Teflon Variseal)
-G6 = Grommit Housing, Epoxy Encapsulated (Class H) **Coil Construction**
-203 = 12 VDC **Supply Voltage**

B-Cryo Series – Part Number Build

Build a Valve Part Number by filling in the boxes below using the related code numbers on this page.

B	__	__ __	__ __	-	__ __	__ __	-	__	-	__ __	-	__ __ __
Series	1	2	3		4	5		6		7		8

1 Porting

C	Bottom Outlet
N	In-Line

2 + 3 Valve Function & Maximum Operating Pressure Differential

Valve Function	Code	MOPD		Orifice		C_v	K_v
		psig	bar	Body inches	Body mm	Body	Body
2-WAY Normally Closed	2002	900	62	3/64	1.19	0.045	0.038
	2005	405	28	1/16	1.59	0.075	0.064
	2008	270	19	5/64	1.98	0.105	0.089
	2016	160	11	3/32	2.38	0.160	0.136
	2021	110	7.6	7/64	2.78	0.190	0.162
	2025	80	5.5	1/8	3.18	0.255	0.217
	2028	65	4.5	5/32	3.97	0.365	0.310
	2033	30	2.1	3/16	4.76	0.440	0.374

4 Body Material

01	303 Stainless Steel
05	316 Stainless Steel

5 Body Port

LC	1/8" NPT Female

6 Seal Material

R	Rulon®

7 Coil Construction

G6	Grommet Housing, Epoxy Encapsulated (Class H) Lead Wires
C6	Conduit Housing, Epoxy Encapsulated (Class H) Lead Wires
C9	Conduit Housing (Filled), Epoxy Encapsulated (Class H) Lead Wires

8 Supply Voltages

203	12 VDC
204	24 VDC
300	24/50/60R
301	120/50/60R

B-Cryo Series – Additional Component Details & Dimensions

2 Valve Function

Flow Schematic

Flow Key

Blocked Flow	O/S = Over Seat
Free Flow	U/S = Under Seat

Valve Type	De-Energized	Energized
2-Way Normally Closed	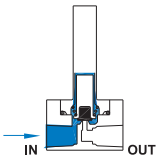	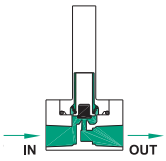

7 Coil Construction

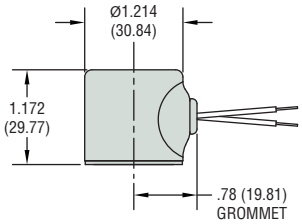

Grommet